Uniwersytet Wrocławski

Recommender Systems

Graphs, Sequences & Augmentations

Klaudia Dynak

Computational Intelligence Research Group, Institute of Computer Science

Contents

Sequential Recommendations

SASRec

Graph-based RS

LightGCN

Augmentions for RS

SimGCL

Challenges in RS

Sequential Recommendations

Self-Attentive Sequential Recommendation

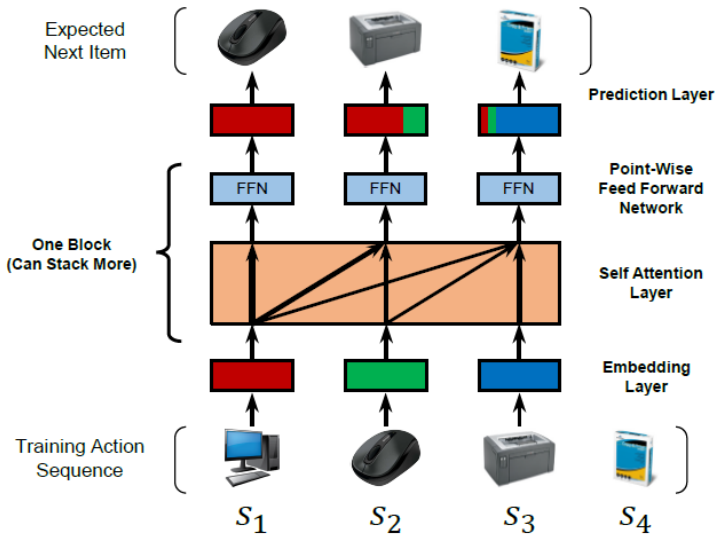

Figure 1: A simplified diagram showing the training process of SASRec. At each time step, the model considers all previous items, and uses attention to 'focus on' items relevant to the next action.

The goal of our work is to balance [. . .], by proposing a sequential model based on self-attention (SASRec) that allows us to capture **long-term semantics** *(like an RNN), but, using an attention mechanism, makes its* **predictions based on relatively few actions** *(like an MC).*

https://arxiv.org/abs/1808.09781

Transformer

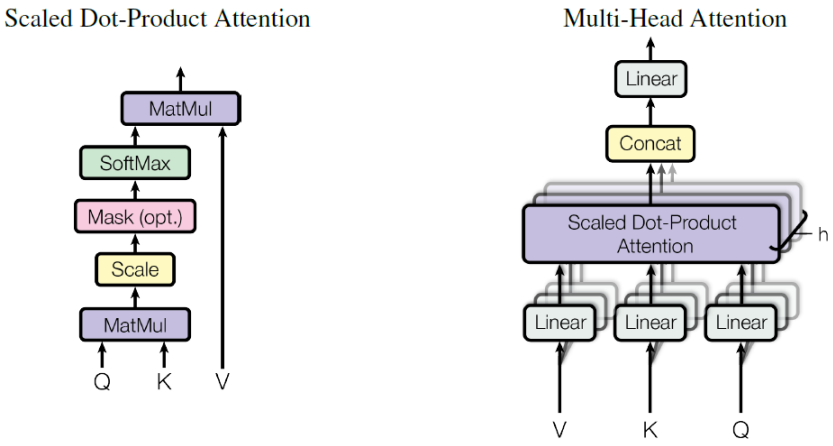

$$\text{Attention}(Q, K, V) = \text{softmax}(\frac{QK^T}{\sqrt{d_k}})V$$

Q, K V - Queries, Keys, and Values matrices

order in sequence $-- >$ positional embeddings

https://papers.nips.cc/paper_files/paper/2017/hash/3f5ee243547dee91fbd053c1c4a845aa-Abstract.html

SASRec

- The task is to predict the *shifted* sequence

$$(\mathcal{S}_1^u, \mathcal{S}_2^u, \ldots, \mathcal{S}_{|\mathcal{S}^u|-1}^u) \longrightarrow (\mathcal{S}_2^u, \mathcal{S}_3^u, \ldots, \mathcal{S}_{|\mathcal{S}^u|}^u)$$

- Embeddings Layer (fixed length: cutting/padding):

$$\hat{\mathbf{V}}_s = \begin{bmatrix} \mathbf{V}_{s_1} + \mathbf{P}_1 \\ \mathbf{V}_{s_2} + \mathbf{P}_2 \\ \vdots \\ \mathbf{V}_{s_n} + \mathbf{P}_n \end{bmatrix}$$

  - Positional Embeddings $\mathbf{P}$ are trainable.
  - Constant zero vector for padding.

SASRec

Attention block:

- Self-Attention Layer:

$$\mathbf{S} := \mathbf{SA}(\hat{\mathbf{V}}_s) = \text{Attention}(Q : \hat{\mathbf{V}}_s \mathbf{W}^Q, K : \hat{\mathbf{V}}_s \mathbf{W}^K, V : \hat{\mathbf{V}}_s \mathbf{W}^V)$$

- **Causality:** modify the attention by forbidding all links between Q_i and K_j if $j > i$. Achieved with a mask.
- Feed forward network on $\mathbf{S}$: linear $->$ ReLU $->$ linear.
- Several SA and FFN blocks are stacked.
- To prevent overfitting, authors use layer normalization (different from batch normalization!), dropout, and residual connections.

SASRec

- The predictions are made on the basis of the dot product (aka Matrix Factorization Layer).
- Binary cross-entropy loss (1 random negative sample).
- Attention weights provide us with some interpretability.
- Split specific for sequential recommendations (last user item for testing, second last item for validation).
- Check out the very nice experiments in the paper.

Graph-based RS

Vanilla Gradient Neural Network (recap)

- $\mathcal{G} = (\mathcal{V}, \mathcal{E}, X^{\mathcal{V}}, X^{\mathcal{E}})$ - a graph is a tuple of vertices, edges, vertices features and edges features.
- The target is to provide meaningful node embedding matrix $\mathbf{V}$.
- In each layer we have two major phases:
  1. Aggregation:
  $$\mathbf{m}_v^{(l)} = f\left(X_v^{\mathcal{V}}, X_{\mathcal{N}_v}^{\mathcal{E}}, X_{\mathcal{N}_v}^{\mathcal{V}}, \mathbf{V}_{\mathcal{N}_v}^{(l-1)}\right)$$
  2. Message passing:
  $$\mathbf{v}_v^{(l)} = g\left(\mathbf{v}_v^{(l-1)}, \mathbf{m}_v^{(l)}\right)$$

https://cs.mcgill.ca/ wlh/comp766/files/chapter4_draft_mar29.pdf

Graph Convolutional Network (recap)

$$\mathbf{V}_v^{(l)} = \sigma\left(\frac{1}{\sqrt{|\mathcal{N}_v|+1}} \sum_{w \in \mathcal{N}_v \cup \{v\}} \frac{1}{\sqrt{|\mathcal{N}_w|+1}} \mathbf{V}_w^{(l-1)} W^{(l)}\right)$$

$$\mathbf{V}^{(l)} = \sigma\left(\tilde{D}^{-\frac{1}{2}} \tilde{A} \tilde{D}^{-\frac{1}{2}} \mathbf{V}^{(l-1)} W^{(l)}\right)$$

- $\tilde{A} = A + I_N$: the adjacency matrix of the undirected graph $\mathcal{G}$ with added self-connections (I_N – the identity matrix).
- $\tilde{D}_{ii} = \sum_j \tilde{A}_{ij}$: the diagonal degree matrix of $\tilde{A}$.
- $W^{(l)}$: a layer-specific trainable weight matrix.
- $\sigma(\cdot)$: an activation function, such as the ReLU function, $\mathrm{ReLU}(\cdot) = \max(0, \cdot)$.
- $\mathbf{V}^{(l)} \in \mathbb{R}^{N \times D}$: the matrix of activations in the lth layer.
- $\mathbf{V}^{(0)} = X^{\mathcal{V}}$: the input feature matrix.

https://arxiv.org/pdf/1609.02907

Data Structure

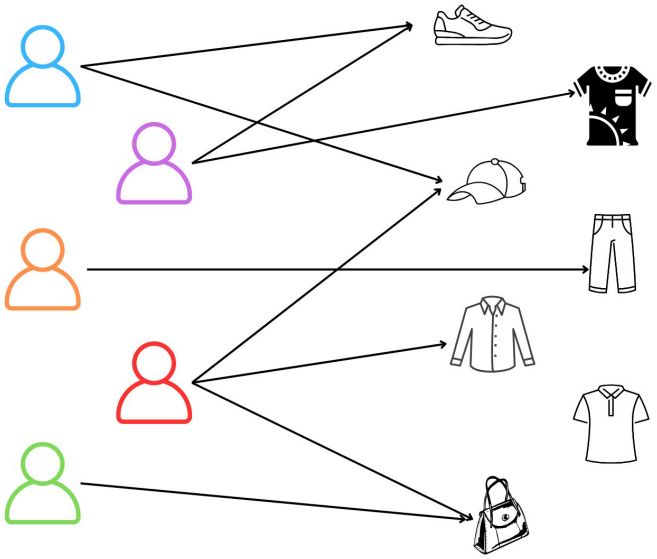

- $\mathcal{V} = (\mathcal{U}, \mathcal{I})$ – we have nodes for both users and items
- $\mathcal{E} = \{(u, i) : \text{ user } u \text{ interacted with item } i\}$
- $A = \begin{bmatrix} 0 & R \\ R^\top & 0 \end{bmatrix}$ – adjacency matrix, R – binary interaction matrix
- We need both item and embeddings. We use the standard procedure with dot-product scores and BPR loss.

LightGCN

- no node and edge features, no non-linear activations – justified by an ablation study on NGCF
- neighborhood aggregation

$$\mathbf{e}_u^{(k+1)} = \sum_{i \in \mathcal{N}_u} \frac{1}{\sqrt{|\mathcal{N}_u|}\sqrt{|\mathcal{N}_i|}} \mathbf{e}_i^{(k)},$$

$$\mathbf{e}_i^{(k+1)} = \sum_{u \in \mathcal{N}_i} \frac{1}{\sqrt{|\mathcal{N}_i|}\sqrt{|\mathcal{N}_u|}} \mathbf{e}_u^{(k)}.$$

$$\mathbf{V}^{(l)} = \left(D^{-\frac{1}{2}} A D^{-\frac{1}{2}}\right) \mathbf{V}^{(l-1)}$$

- self-connection obtained after going through all layers:

$$V = \frac{1}{L+1} \sum_{l=0}^{L} V^{(l)}$$

- the only trainable parameters are embedding vectors

https://arxiv.org/abs/2002.02126 In the paper you can also find:

- > an ablation study on previous Neural Grapf Collaborative Filtering model
- > comparison to similar architectures
- > experiments

Augmentions for RS

Node and edge dropout

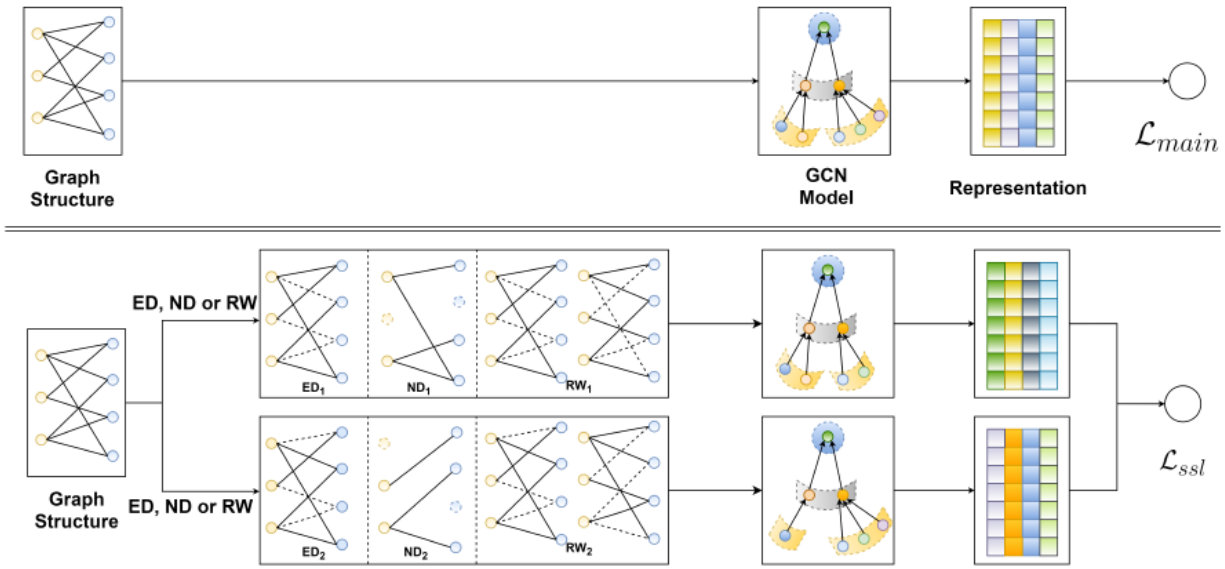

Figure 1: The overall system framework of SGL. The upper layer illustrates the working flow of the main supervised learning task while the bottom layer shows the working flows of SSL task with augmentation on graph structure.

https://dl.acm.org/doi/10.1145/3404835.3462862

Diffusion Models

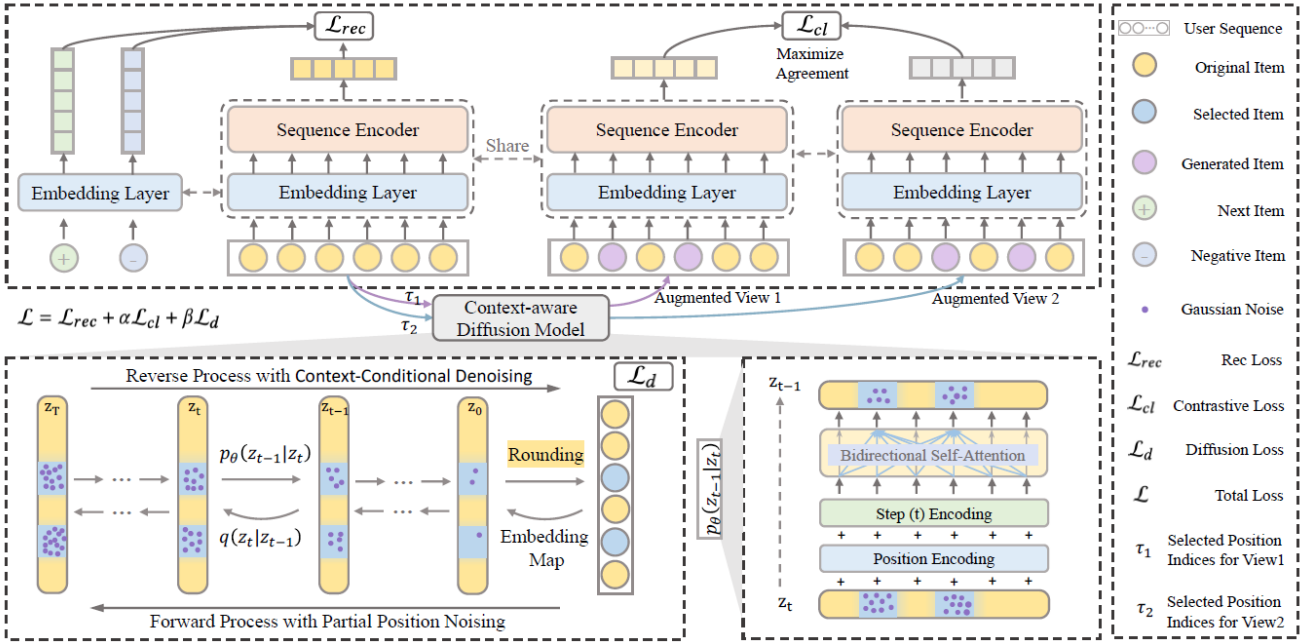

Figure 2: Overview of our proposed CaDiRec. CaDiRec employs a context-aware diffusion model to generate reasonable augmented views for contrastive learning. The context-aware diffusion model comprises a forward process with partial position noising and a reverse process with context-conditional denoising. These designs enable the model to generate contextually appropriate substitutions for selected positions, leading to the production of reasonable augmented sequences. To effectively capture contextual dependencies, CaDiRec employs a bidirectional Transformer architecture within the diffusion model.

https://dl.acm.org/doi/10.1145/3627673.3679655

SimGCL

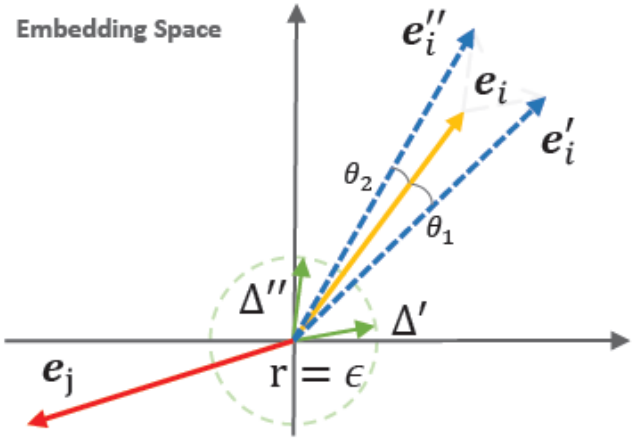

Figure 3: An illustration of the proposed random noise-based data augmentation in $\mathbb{R}^2$.

- noise augmentations result in even embedding distribution

https://dl.acm.org/doi/10.1145/3477495.3531937

InfoNCE loss function

$$\mathcal{L}_{joint} = \mathcal{L}_{rec} + \lambda \mathcal{L}_{cl}, \tag{1}$$

which consists of two losses: recommendation loss $\mathcal{L}_{rec}$ and CL loss $\mathcal{L}_{cl}$. The InfoNCE in SGL is formulated as:

$$\mathcal{L}_{cl} = \sum_{i \in \mathcal{B}} -\log \frac{\exp(\mathbf{z}_i'^{\top} \mathbf{z}_i'' / \tau)}{\sum_{j \in \mathcal{B}} \exp(\mathbf{z}_i'^{\top} \mathbf{z}_j'' / \tau)}, \tag{2}$$

- L_2 normalized embeddings
- differences between contrasitve views
- the key factor in SGL was the loss function (not the augmentations with edge/node dropout): BPR + InfoNCE

InfoNCE: https://arxiv.org/abs/1807.03748

Embedding Uniformity

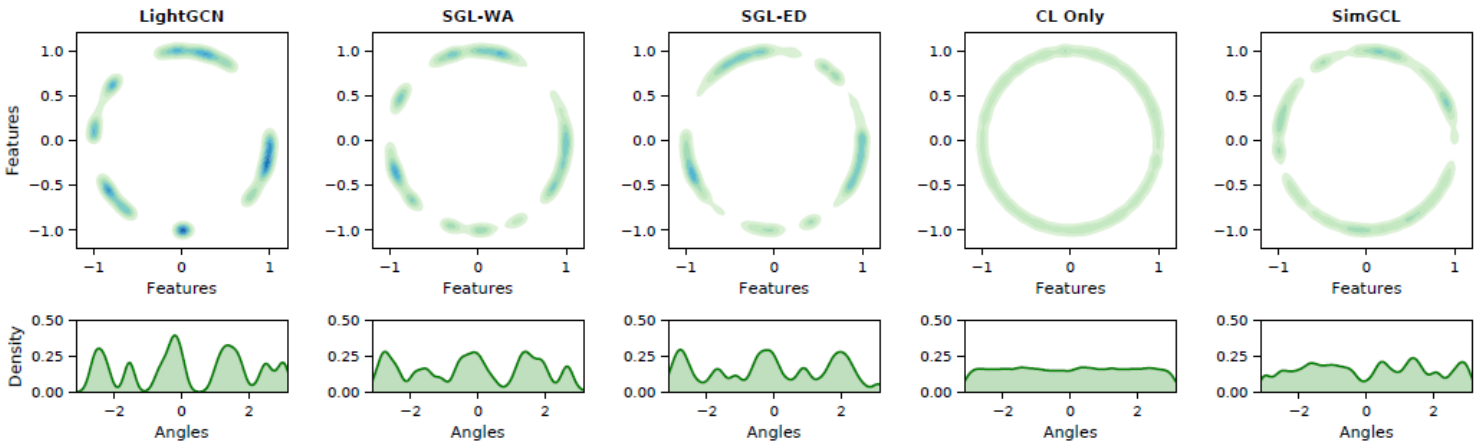

(a) Distribution of item representations learned from the dataset of Yelp2018.

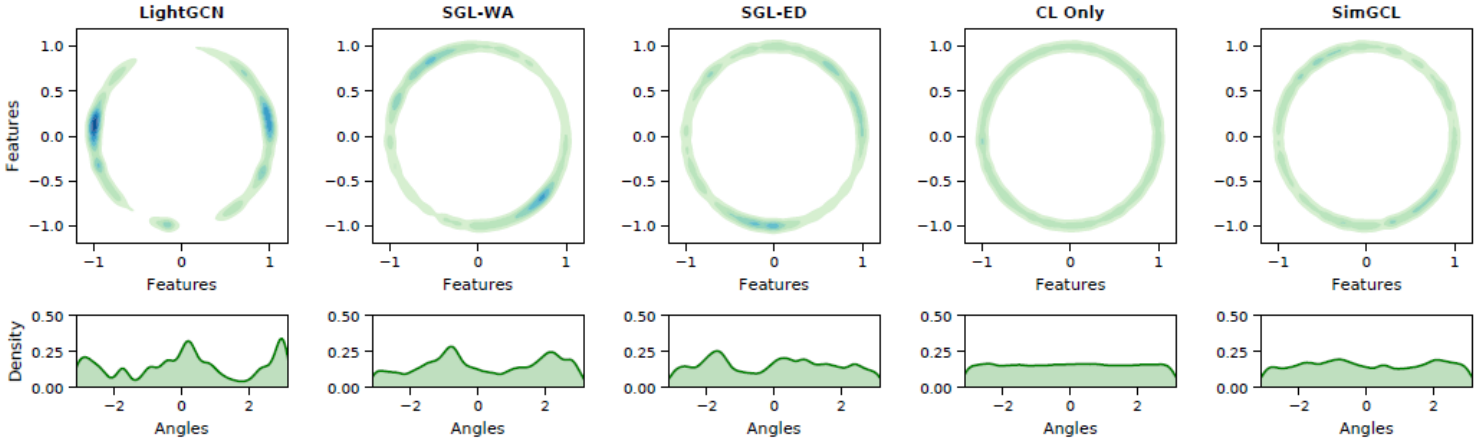

(b) Distribution of item representations learned from the dataset of Amazon-Book.

Figure 2: We plot feature distributions with Gaussian kernel density estimation (KDE) in $\mathbb{R}^2$ (the darker the color is, the more points fall in that area.) and KDE on angles (i.e., arctan2(y, x) for each point $(x,y) \in \mathcal{S}^1$).

Challenges in RS

Current Research Directions & Challenges

- Explainability
- Multimodal data
- Multibehaviour
- Conversational RS
- Fairness

- Exposure and popularity bias
- False Negatives
- Extreme Sparsity
- Noise, especially in implicit feedback
- Cold-start
- Scalability

Uniwersytet Wrocławski

Recommender Systems

Graphs, Sequences & Augmentations

Klaudia Dynak

Computational Intelligence Research Group, Institute of Computer Science